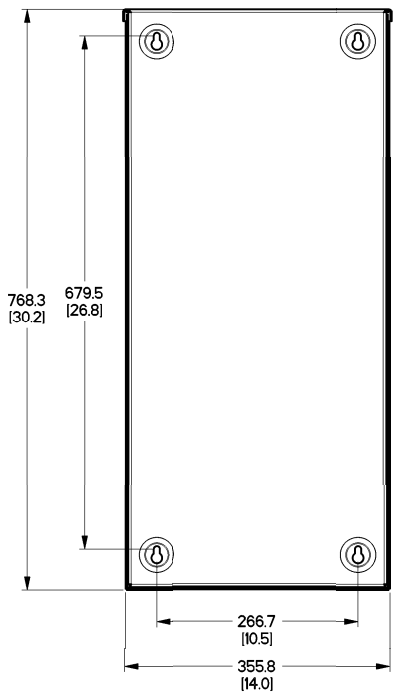

TRANSFER SWITCH
(IF SUPPLIED)

MOUNTING TO CONCRETE PAD

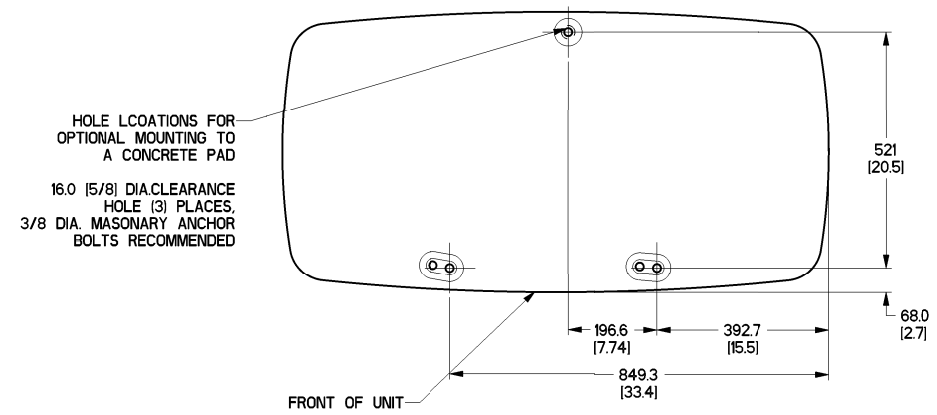

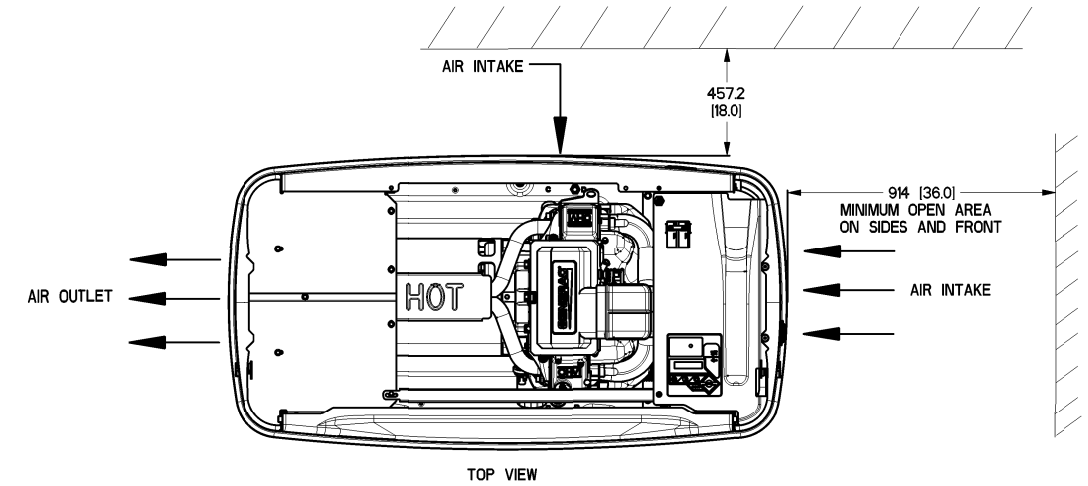

TOP VIEW

"DO NOT LIFT BY ROOF"

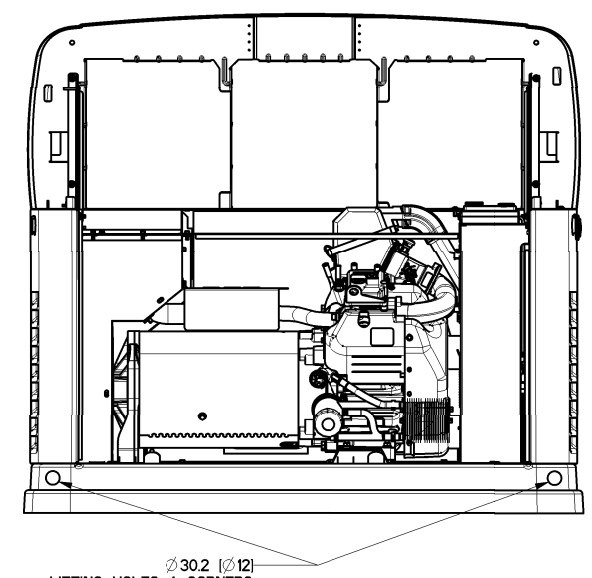

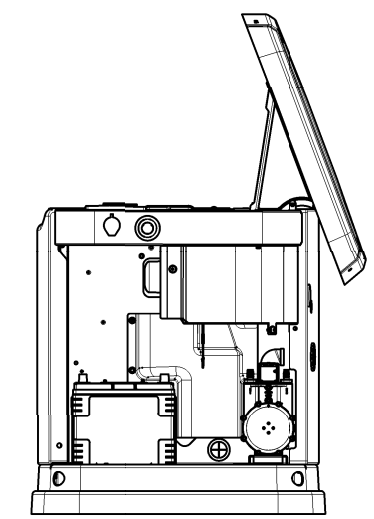

RIGHT VIEW
INTAKE PANEL REMOVED

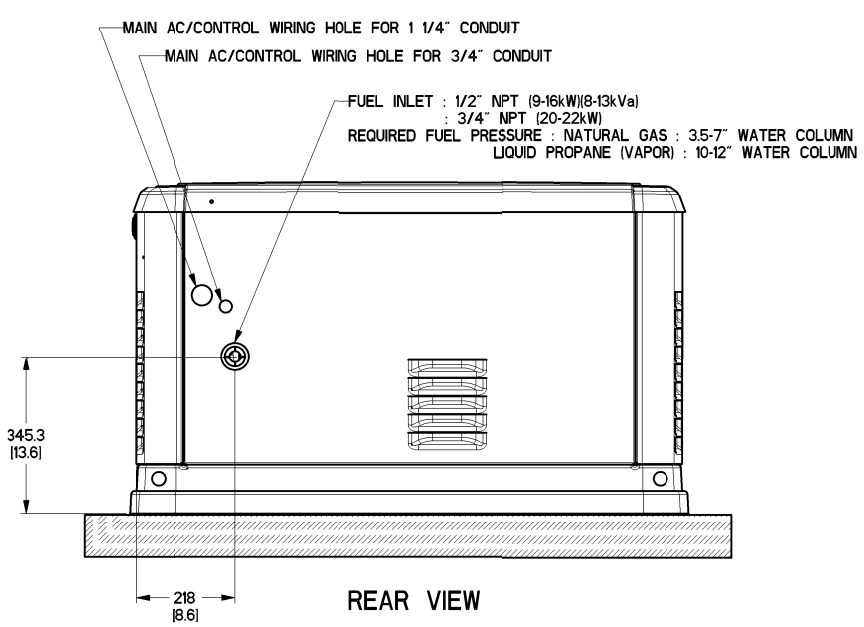

REAR VIEW

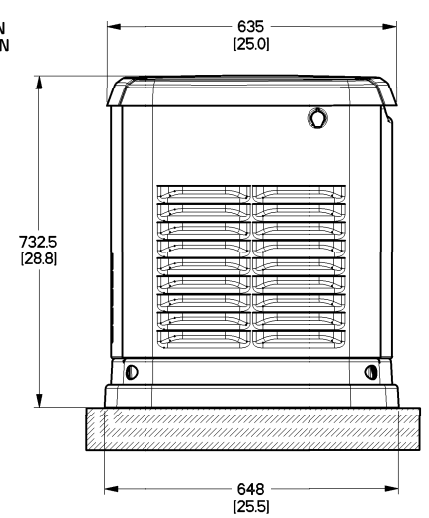

LEFT SIDE VIEW

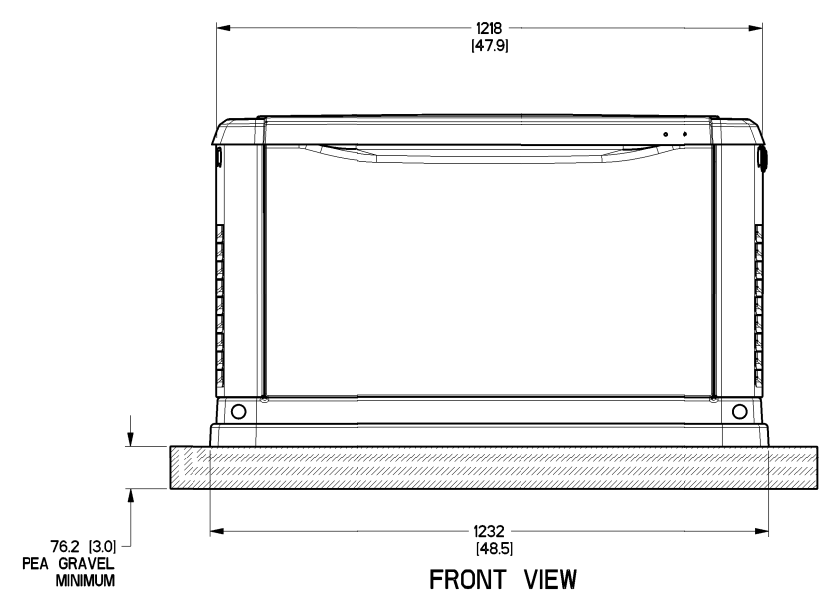

FRONT VIEW

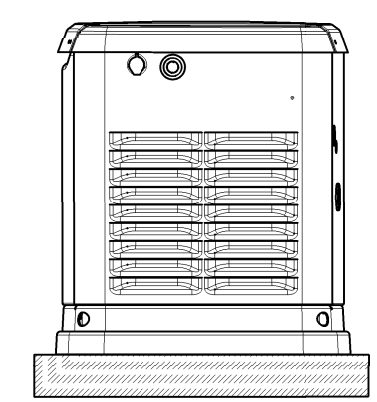

RIGHT SIDE VIEW

ALL DIMENSIONS IN:
MILLIMETERS [INCHES]

DRAWING CREATED FROM PRO/ENGINEER
3D FILE. ECO MODIFICATION TO BE
APPLIED TO SOLID MODEL ONLY.

INSTALLATION DRAWING

FIRST USE: G0070430

ELECTRONICALLY APPROVED
INSIDE WINDCHILL

GENERAC

TITLE
INSTALL HSB GENERATOR

ISSUE DATE: 03/18/2016

SIZE	CAGE NO	DWG NO	REV
B	N/A	10000002487	B

SCALE NTS | WT-KG N/A | SHEET 1 of 1